10.Clutch Pedal

A: REMOVAL

1) Disconnect the ground cable from the battery.
2) Remove the steering column. <Ref. to PS-21, REMOVAL, Tilt Steering Column.>
3) Disconnect the connector from the stop light switch and clutch switch.
4) Remove the snap pins from clevis pins which secure the lever to the push rod and operating rod.
5) Pull out the clevis pins which secures the lever to the push rod and operating rod.

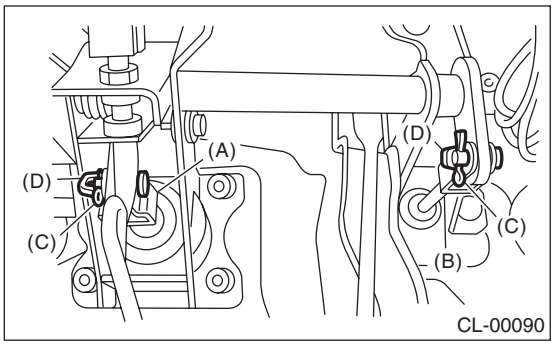

(A) Operating rod
(B) Push rod
(C) Snap pin
(D) Clevis pin

6) Remove the air intake chamber. (Non-turbo model) <Ref. to IN(H4SO)-6, REMOVAL, Air Intake Chamber.>
7) Remove the intercooler. (Turbo model) <Ref. to IN(H4DOTC)-13, REMOVAL, Intercooler.>
8) Remove the nut which secures the clutch master cylinder.

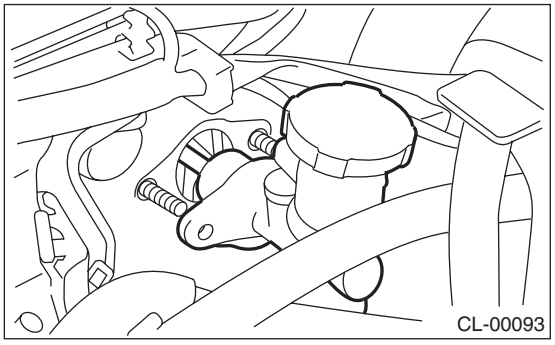

9) Remove the bolts and nuts which secure the brake pedal and clutch pedal, and remove the pedal assembly.

B: INSTALLATION

1) Install in the reverse order of removal.

CAUTION:
Always use a new clevis pin.

2) Adjust the clutch pedal after installation. <Ref. to CL-31, ADJUSTMENT, Clutch Pedal.>
3) Adjust the clutch switch (starter interlock). <Ref. to CL-35, ADJUSTMENT, Clutch Switch.>

C: DISASSEMBLY

1) Remove the clip, assist spring, rod and bushing.

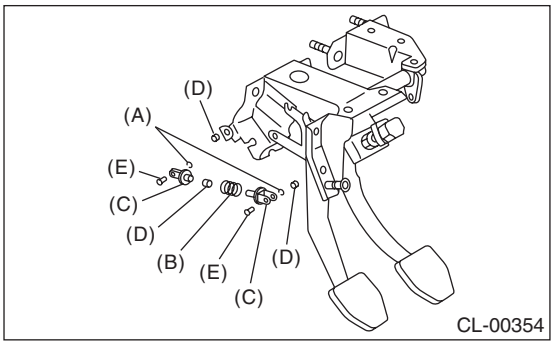

(A) Clip
(B) Assist spring
(C) Assist rod
(D) Bushing
(E) Clevis pin

2) Remove the spring pin and lever.

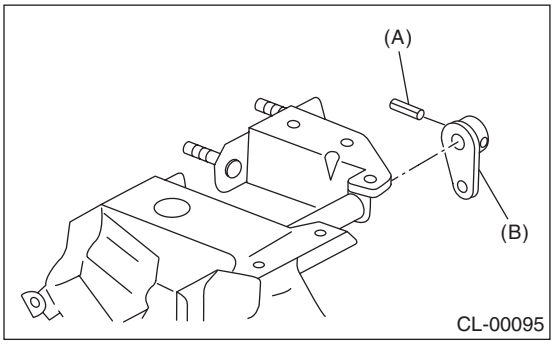

(A) Pin
(B) Lever

3) Remove the clutch pedal and bushings.

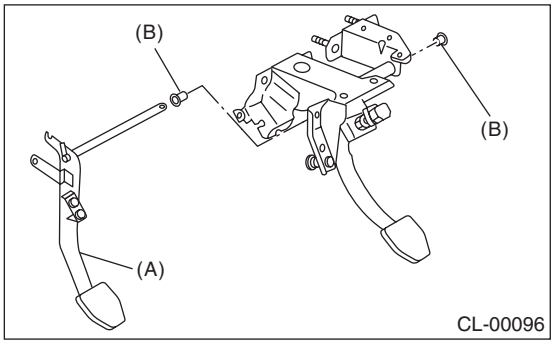

(A) Clutch pedal
(B) Bushing

4) Remove the stopper, clip, O-ring and rod S, and remove the spring and bushing S.

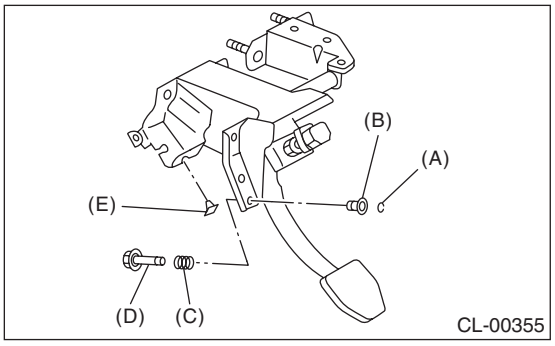

(A) Clip
(B) Bushing S
(C) Spring S
(D) Rod S
(E) Stopper

5) Remove the stopper from the clutch pedal.
6) Remove the clutch pedal pad. (Non-turbo model)

D: ASSEMBLY

1) Install the stopper, etc., temporarily to the pedal bracket.
2) Clean the clutch pedal and brake pedal bushing holes, apply grease, and install the bushings.
3) Align the holes of the pedal bracket, clutch pedal and brake pedal, and install the brake pedal return spring, assist rod, spring and bushing.

NOTE:
Clean the inside of the bushings and apply grease before installing the spacer.

E: INSPECTION

Move the clutch pedal pads in the lateral direction with a force of approximately 10 N (1 kgf, 2 lbf) to check that the clutch pedal deflection is within the service limit.

CAUTION:
If the play exceeds the service limit, replace the bushing with a new part.

Deflection of the clutch pedal:
Service limit
5.0 mm (0.197 in) or less

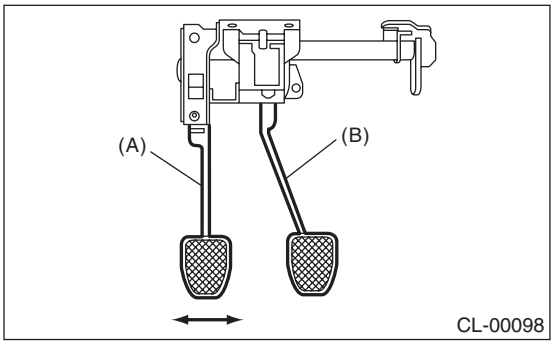

(A) Clutch pedal
(B) Brake pedal

F: ADJUSTMENT

1) Turn the lock nut until the full stroke of clutch pedal becomes within the specification.

CAUTION:
When adjusting the full stroke of clutch pedal, do not turn the clutch switch.

NOTE:
If the lock nut cannot adjust the full stroke of clutch pedal to the specified value, adjust it by turning the master cylinder push rod.

Clutch pedal full stroke A:
130 — 135 mm (5.12 — 5.31 in)

Tightening torque (Clutch switch lock nut):
T: 8 N·m (0.8 kgf-m, 5.9 ft-lb)

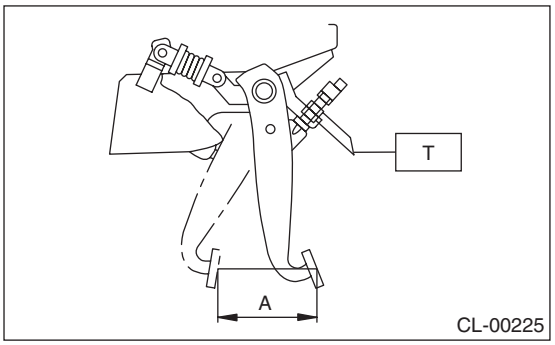

2) If the full stroke is not within the specified range, adjust it by loosening the clutch stopper nut (for models without cruise control) or clutch switch lock nut (for models with cruise control).

Tightening torque:
8 N·m (0.8 kgf-m, 5.8 ft-lb)

3) Loosen the push rod lock nuts.

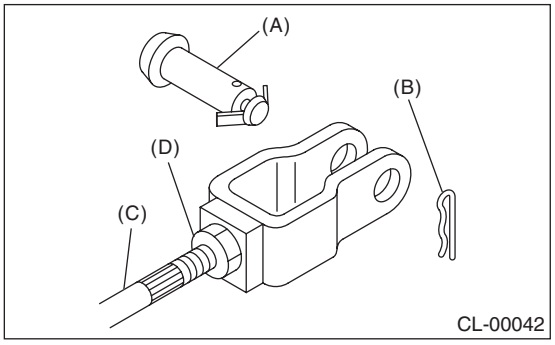

(A) Clevis pin
(B) Snap pin
(C) Push rod
(D) Push rod lock nut

4) Rotate the push rod to adjust.
(1) Make sure that the clutch pedal contacts the stopper bolt side (for models without cruise control) or clutch switch side (for models with cruise control) when the pedal is released.
(2) Make sure that the clutch pedal contacts the clutch pedal bracket stopper when the clutch pedal is at the maximum stroke position.

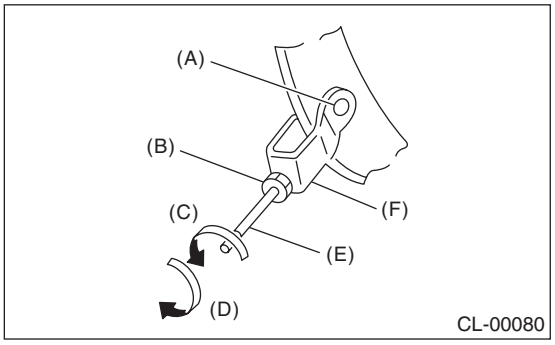

(A) Clevis hole
(B) Push rod lock nut
(C) In the shorter direction
(D) In the longer direction
(E) Push rod
(F) Clevis

5) Turn the push rod to shorten until a clearance is gained on the stopper bolt side (for models without cruise control) or clutch switch side (for models with cruise control).

- Models without cruise control

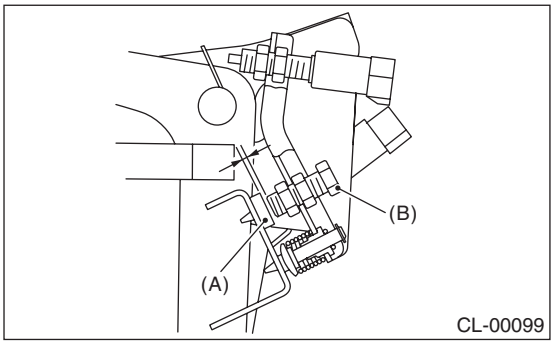

(A) Stopper
(B) Stopper bolt

- Models with cruise control

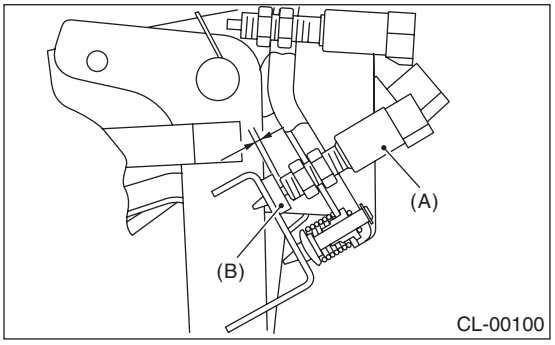

(A) Clutch switch
(B) Stopper

6) Turn the push rod to lengthen until the clutch pedal contacts the stopper bolt (for models without cruise control) or clutch switch (for models with cruise control).
7) Turn further in the direction that will shorten the push rod (arrow direction shown in figure) by 270°.

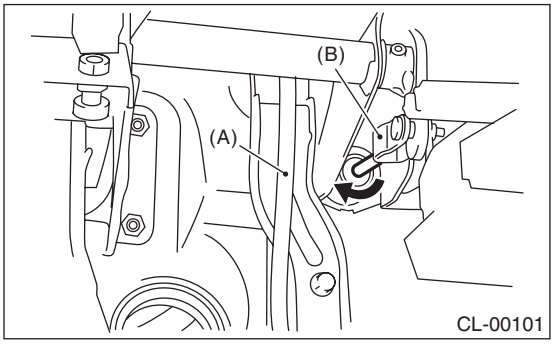

(A) Accelerator pedal
(B) Clevis

8) Check that the clevis pin moves smoothly by moving it in the left and right directions.

9) Tighten the push rod lock nut.

Tightening torque (Push rod lock nut):
T: 10 N·m (1.0 kgf-m, 7 ft-lb)

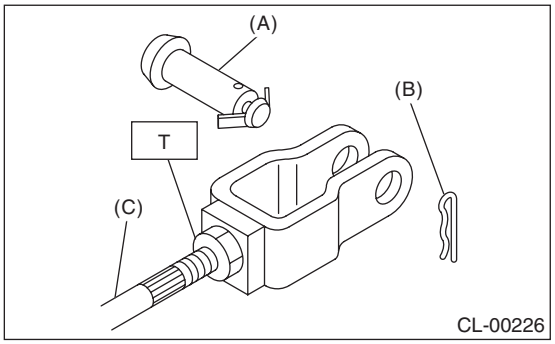

(A) Clevis pin
(B) Snap pin
(C) Push rod

10) Depress and release the clutch pedal two or three times to ensure that the clutch pedal and release lever operate smoothly. If the clutch pedal and release lever do not operate smoothly, bleed air from the clutch hydraulic system. <Ref. to CL-28, Clutch Fluid Air Bleeding.>
11) Measure the clutch pedal full stroke length again to ensure that it is within specifications. If it is not within specifications, repeat adjustment procedures again from the beginning.

Clutch pedal full stroke:
130 — 135 mm (5.12 — 5.31 in)

12) Push the release lever until the operating cylinder push rod retracts. Make sure that the clutch fluid level in the reservoir tank increases. If the clutch fluid level increases, the hydraulic clutch is properly adjusted; If the fluid level does not increase or the push rod does not retract, replace the master cylinder with a new part. <Ref. to CL-24, Master Cylinder.>

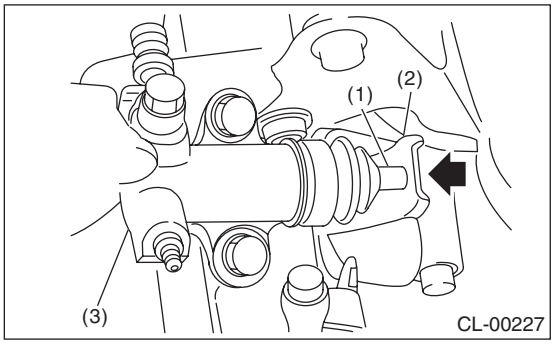

(1) Push rod
(2) Release lever
(3) Operating cylinder

13) Push the release lever until the operating cylinder push rod retracts. Check that the clutch fluid level in the reservoir tank increases.

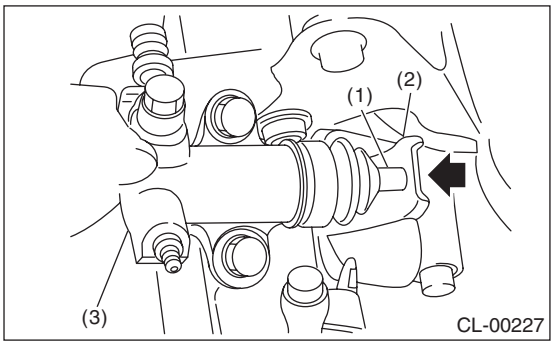

(1) Push rod
(2) Release lever
(3) Operating cylinder

14) If the clutch fluid level increases, hydraulic clutch play is correct.
15) If the clutch fluid level does not increase or push rod does not retract, readjust the clutch pedal.
16) Check the fluid level using the scale on the outside of the reservoir tank. If the level is below “MIN”, fill fluid up to “MAX” level.

Recommended clutch fluid:
New FMVSS No. 116 DOT3 or DOT4 brake fluid

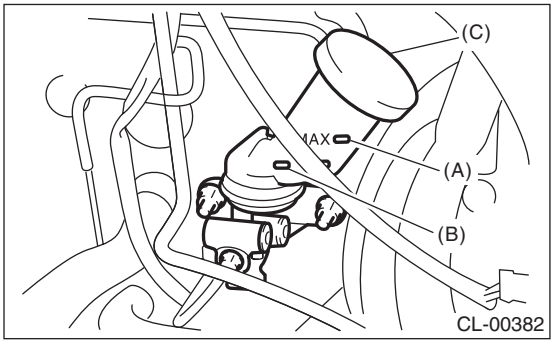

(A) MAX. level
(B) MIN. level
(C) Reservoir tank